SUMMIT CARE
11-19 FRENCHMANS ROAD, RANDWICK NSW
DA - CIVIL ENGINEERING WORKS

GENERAL NOTES:

1. ALL WORK TO BE CARRIED OUT IN ACCORDANCE WITH RANDWICK CITY COUNCIL'S SPECIFICATION. CONTRACTOR TO OBTAIN AND RETAIN A COPY ON SITE DURING THE COURSE OF THE WORKS.
2. ALL NEW WORKS ARE TO MAKE A SMOOTH JUNCTION WITH EXISTING CONDITIONS, AND MARRY IN A 'WORKMANLIKE' MANNER.
3. THE CONTRACTOR IS TO VERIFY THE LOCATION OF ALL SERVICES WITH EACH RELEVANT AUTHORITY. ANY DAMAGE TO SERVICES SHALL BE RECTIFIED BY THE CONTRACTOR OR THE RELEVANT AUTHORITY AT THE CONTRACTOR'S EXPENSE. SERVICES SHOWN ON THESE PLANS ARE ONLY THOSE EVIDENT AT THE TIME OF SURVEY OR AS DETERMINED FROM SERVICE DIAGRAMS. HENRY AND HYMAS CONSULTING PTY. LTD. CANNOT GUARANTEE THE INFORMATION SHOWN NOR ACCEPT ANY RESPONSIBILITY FOR INACCURACIES OR INCOMPLETE DATA.
4. SERVICES & ACCESSES TO THE EXISTING PROPERTIES ARE TO BE MAINTAINED IN WORKING ORDER AT ALL TIMES DURING CONSTRUCTION.
5. ADJUST EXISTING SERVICE COVERS TO SUIT NEW FINISHED LEVELS TO RELEVANT AUTHORITY REQUIREMENTS WHERE NECESSARY.
6. REINSTATE AND STABILISE ALL DISTURBED LANDSCAPED AREAS.
7. MINIMUM GRADE OF SUBSOIL SHALL BE 0.5% (1:200) FALL TO OUTLETS.
8. ALL TEMPORARY SEDIMENT AND EROSION CONTROL DEVICES ARE TO BE CONSTRUCTED, PLACED AND MAINTAINED IN ACCORDANCE WITH THE TECHNICAL SPECIFICATIONS, EROSION AND SEDIMENTATION CONTROL PLAN AND RANDWICK CITY COUNCIL'S REQUIREMENTS WHERE APPLICABLE.
9. CONTRACTOR TO CHECK AND CONFIRM SITE DRAINAGE CONNECTIONS ACROSS THE VERGE PRIOR TO COMMENCEMENT OF SITE DRAINAGE WORKS.
10. PROPERTIES AFFECTED BY THE WORKS ARE TO BE NOTIFIED IN ADVANCE WHERE DISRUPTION TO EXISTING ACCESS IS LIKELY.

EXISTING SERVICES & FEATURES

- THE CONTRACTOR SHALL ALLOW FOR THE CAPPING OFF, EXCAVATION AND REMOVAL (IF REQUIRED) OF ALL EXISTING SERVICES IN AREAS AFFECTED BY WORKS WITHIN THE CONTRACT AREA OR AS SHOWN ON THE DRAWINGS UNLESS DIRECTED OTHERWISE BY THE SUPERINTENDENT.
-
- THE CONTRACTOR SHALL ENSURE THAT AT ALL TIMES SERVICES TO ALL BUILDINGS NOT AFFECTED BY THE WORKS ARE NOT DISRUPTED.
- PRIOR TO COMMENCEMENT OF ANY WORKS THE CONTRACTOR SHALL GAIN APPROVAL OF HIS PROGRAM FOR THE RELOCATION/ CONSTRUCTION OF TEMPORARY SERVICES.
- CONTRACTOR SHALL CONSTRUCT TEMPORARY SERVICES TO MAINTAIN SUPPLY TO EXISTING BUILDING'S REMAINING IN OPERATION DURING WORKS TO THE SATISFACTION AND APPROVAL OF THE SUPERINTENDENT. ONCE DIVERSION IS COMPLETE AND COMMISSIONED, THE CONTRACTOR SHALL REMOVE ALL SUCH TEMPORARY SERVICES AND MAKE GOOD TO THE SATISFACTION OF THE SUPERINTENDENT.
- INTERRUPTION TO SUPPLY OF EXISTING SERVICES SHALL BE DONE SO AS NOT TO CAUSE ANY INCONVENIENCE TO THE PRINCIPAL. CONTRACTOR TO GAIN APPROVAL FROM THE SUPERINTENDENT FOR TIME OF INTERRUPTION.
- EXISTING SERVICES, BUILDINGS, EXTERNAL STRUCTURES AND TREES SHOWN ON THESE DRAWINGS ARE EXISTING FEATURES PRIOR TO ANY DEMOLITION WORKS.
- EXISTING SERVICES UNLESS SHOWN ON SURVEY PLAN HAVE BEEN PLOTTED FROM SERVICES SEARCH PLANS AND AS SUCH THEIR ACCURACY CANNOT BE GUARANTEED. IT IS THE RESPONSIBILITY OF THE CONTRACTOR TO COMPLETE A 'DIAL BEFORE YOU DIG' SEARCH AND TO ESTABLISH THE LOCATION AND LEVEL OF ALL EXISTING SERVICES PRIOR TO THE COMMENCEMENT OF ANY WORK. ANY DISCREPANCIES SHALL BE REPORTED TO THE SUPERINTENDENT. CLEARANCES SHALL BE OBTAINED FROM THE RELEVANT SERVICE AUTHORITY.
- ALL BRANCH GAS AND WATER SERVICES UNDER DRIVEWAYS AND BRICK PAVING SHALL BE LOCATED IN 80Ø uPVC SEWER GRADE CONDUITS EXTENDING A MINIMUM OF 500mm BEYOND EDGE OF PAVING.

SUBGRADE PREPARATION - SITEWORKS.

1. THE EXISTING SURFACE IS TO BE STRIPPED OF ANY PAVEMENTS, TOPSOIL OR OBVIOUS UNSUITABLE MATERIAL.
2. EXCAVATE TO ACHIEVE SUBGRADE LEVELS WHERE NECESSARY.
3. THE EXPOSED SUBGRADE AFTER STRIPPING AND/ OR EXCAVATION IS TO BE PROOF ROLLED USING NOT FEWER THAN 5 PASSES OF A MINIMUM 8 TONNE DEAD WEIGHT STEEL SMOOTH-DRUM ROLLER UNDER THE SUPERVISION OF AN EXPERIENCED GEOTECHNICAL ENGINEER OR AN EXPERIENCED CIVIL ENGINEER. ANY AREAS ON THE SUBGRADE EXHIBITING EXCESSIVE DEFLECTION / MOVEMENT UNDER ROLLER TO BE EXCAVATED TO A MIN. DEPTH OF 0.5m AND REPLACED WITH APPROVED GRANULAR MATERIAL COMPACTED IN 250mm LOOSE LAYERS OR AS DIRECTED BY THE GEOTECHNICAL ENGINEER.
4. ENGINEERED FILL FOR REPLACEMENT OF SOFT OR HEAVING AREAS OR FOR BULK FILLING TO COMPRISE ESSENTIALLY OF GRANULAR MATERIALS (EG. EXCAVATED SHALE), WITH A PARTICLE SIZE NOT GREATER THAN 75mm DIAMETER. ENGINEERED FILL TO BE PLACED IN LAYERS NOT EXCEEDING 250mm LOOSE THICKNESS AND COMPACTED TO BETWEEN 98% AND 102% OF STANDARD MAXIMUM DRY DENSITY (SMDD) WITHIN ± 2% OF OPTIMUM MOISTURE CONTENT (OMC).
5. IMPORTED FILLING (IF REQUIRED) IS TO BE TO THE APPROVAL OF THE GEOTECHNICAL ENGINEER. THE CONTRACTOR IS TO NOMINATE THE SOURCE AND PROVIDE A SAMPLE FOR APPROVAL PRIOR TO IMPORTATION AND PLACEMENT ON SITE.
6. ALL FILL MATERIAL SHALL BE FROM A SOURCE APPROVED BY THE SUPERINTENDENT AND SHALL COMPLY WITH THE FOLLOWING.
   FREE FORM ORGANIC AND PERISHABLE MATTER
   MAXIMUM PARTICLE SIZE = 75mm
   MAXIMUM PLASTICITY INDEX = 15%

LOCALITY SKETCH
NTS

DRAWING SCHEDULE	
19826_DA_C000	COVER SHEET, DRAWING SCHEDULE, NOTES & LOCALITY SKETCH
19826_DA_C100	GENERAL ARRANGEMENT PLAN - GROUND FLOOR
19826_DA_C101	GENERAL ARRANGEMENT PLAN - BASEMENT
19826_DA_C102	GENERAL ARRANGEMENT PLAN - LOWER BASEMENT
19826_DA_C200	STORMWATER MISCELLANEOUS DETAILS
19826_DA_C210	OSD SECTIONS & DETAILS
19826_DA_C211	OSD VOLUME CALCULATION AND NOTES
19826_DA_C220	PUMP OUT SECTIONS & DETAILS
19826_DA_C250	PRE-DEVELOPMENT CATHCMENT PLAN
19826_DA_C251	POST-DEVELOPMENT CATHCMENT PLAN
19826_DA_SE01	SEDIMENT & EROSION CONTROL PLAN
19826_DA_SE02	SEDIMENT & EROSION CONTROL TYPICAL DETAILS

SITEWORKS NOTES

- DATUM A.H.D.
- ORIGIN OF LEVELS. REFER TO BENCH OR STATE SURVEY MARKS WHERE SHOWN ON PLAN.
- CONTRACTOR MUST VERIFY ALL DIMENSIONS AND EXISTING LEVELS ON SITE PRIOR TO COMMENCEMENT OF WORK.
- ALL WORKS TO BE UNDERTAKEN IN ACCORDANCE WITH THE DETAILS SHOWN ON THE DRAWINGS & THE DIRECTIONS OF THE SUPERINTENDENT.
- EXISTING SERVICES UNLESS SHOWN ON SURVEY PLAN HAVE BEEN PLOTTED FROM SERVICES SEARCH PLANS AND AS SUCH THEIR ACCURACY CANNOT BE GUARANTEED. IT IS THE RESPONSIBILITY OF THE CONTRACTOR TO ESTABLISH THE LOCATION AND LEVEL OF ALL EXISTING SERVICES PRIOR TO THE COMMENCEMENT OF ANY WORK. ANY DISCREPANCIES SHALL BE REPORTED TO THE SUPERINTENDENT. CLEARANCES SHALL BE OBTAINED FROM THE RELEVANT SERVICE AUTHORITY.
- WHERE NEW WORKS ABUT EXISTING THE CONTRACTOR SHALL ENSURE THAT A SMOOTH EVEN PROFILE, FREE FROM ABRUPT CHANGES IS ACHIEVED.
- THE CONTRACTOR SHALL ARRANGE ALL SURVEY SETOUT TO BE CARRIED OUT BY A REGISTERED SURVEYOR.
- CARE IS TO BE TAKEN WHEN EXCAVATING NEAR EXISTING SERVICES. NO MECHANICAL EXCAVATION IS TO BE UNDERTAKEN OVER TELSTRA OR ELECTRICAL SERVICES. HAND EXCAVATE IN THESE AREAS.
- CONTRACTOR TO OBTAIN AUTHORITY APPROVALS WHERE APPLICABLE.
- MAKE SMOOTH TRANSITION TO EXISTING SURFACES AND MAKE GOOD.
- THESE PLANS SHALL BE READ IN CONJUNCTION WITH APPROVED LANDSCAPE, ARCHITECTURAL, STRUCTURAL, HYDRAULIC AND MECHANICAL DRAWINGS AND SPECIFICATIONS OR WRITTEN INSTRUCTIONS THAT MAY BE ISSUED RELATING TO DEVELOPMENT AT THE SITE.
- TRENCHES THROUGH EXISTING ROAD AND CONCRETE PAVEMENTS SHALL BE SAWCUT TO FULL DEPTH OF CONCRETE AND A MINIMUM OF 50mm IN BITUMINOUS PAVING.
- ALL BRANCH GAS AND WATER SERVICES UNDER DRIVEWAYS AND BRICK PAVING SHALL BE LOCATED IN 80Ø uPVC SEWER GRADE CONDUITS EXTENDING A MINIMUM OF 500mm BEYOND EDGE OF PAVING.
- GRADES TO PAVEMENTS TO BE AS IMPLIED BY RL'S ON PLAN . GRADE EVENLY BETWEEN NOMINATED RL'S. AREAS EXHIBITING PONDING GREATER THAN 5mm DEPTH WILL NOT BE ACCEPTED/ UNLESS IN A DESIGNATED SAG POINT.
- ALL COVERS AND GRATES ETC TO EXISTING SERVICE UTILITIES ARE TO BE ADJUSTED TO SUIT NEW FINISHED SURFACE LEVELS WHERE APPLICABLE

SUBSOIL DRAINAGE NOTES

1. GENERAL PROVIDE SUBSOIL DRAINS TO INTERCEPT GROUNDWATER SEEPAGE AND PREVENT WATER BUILD-UP BEHIND WALLS AND UNDER FLOORS AND PAVEMENT. CONNECT SUBSOIL TO SURFACE DRAINS OR TO THE STORMWATER DRAINAGE SYSTEM AS APPLICABLE.
2. PIPE DEPTH:
   PROVIDE THE FOLLOWING MINIMUM CLEAR DEPTH, MEASURED TO THE CROWN OF THE PIPE, WHERE THE PIPE PASSES BELOW THE FOLLOWING ELEMENTS:

- 100mm BELOW FORMATION LEVEL OF THE PAVEMENT, KERB OR CHANNEL.
- 100mm BELOW THE AVERAGE GRADIENT OF THE BOTTOM OF FOOTINGS.

3. JOINTING:
   AT JUNCTIONS OF SUBSOIL PIPES PROVIDE TEES, COUPLINGS OR ADAPTORS TO AS2439.1.
4. TRENCH WIDTH MINIMUM 300mm
5. PIPE UNDERLAY
   GENERAL: GRADE THE TRENCH FLOOR EVENLY TO THE GRADIENT OF THE PIPELINE. IF THE TRENCH FLOOR IS ROCK, CORRECT ANY IRREGULARITIES WITH COMPACTED BEDDING MATERIAL. BED PIPING ON A CONTINUOUS UNDERLAY OF BEDDING MATERIAL, AT LEAST 75mm THICK AFTER COMPACTION. LAY THE PIPE WITH ONE LINE OF PERFORATIONS AT THE BOTTOM.

   CHASES: IF NECESSARY TO PREVENT PROJECTIONS SUCH AS SOCKETS AND FLANGES FROM BEARING ON THE TRENCH BOTTOM OR UNDERLAY.
6. PIPE SURROUNDS:
   GENERAL: PLACE THE MATERIAL IN THE PIPE SURROUND IN LAYERS SMALLER THAN OR EQUAL TO 200mm LOOSE THICKNESS, AND COMPACT WITHOUT DAMAGING OR DISPLACING PIPING.
   DEPTH OF OVERLAY: TO THE UNDERSIDE OF THE BASE OF OVERLYING STRUCTURES SUCH AS PAVEMENTS, SLABS AND CHANNELS. TO WITHIN 150mm OF THE FINISHED SURFACE OF UNPAVED OR LANDSCAPED AREAS.
7. FILTER SOCKS PROVIDE POLYESTER PERMEABLE SOCKS CAPABLE OF RETAINING PARTICLES OF 0.25mm SIZES. SECURELY FIT OF JOIN THE SOCK AT EACH JOINT.

SURVEY NOTES

THE EXISTING SITE CONDITIONS SHOWN ON THE FOLLOWING DRAWINGS HAVE BEEN INVESTIGATED BY THE SURVEYOR SPECIFIED IN THE TITLE BLOCK.
THE INFORMATION IS SHOWN TO PROVIDE A BASIS FOR DESIGN. HENRY AND HYMAS PTY. LTD. DOES NOT GUARANTEE THE ACCURACY OR COMPLETENESS OF THE SURVEY BASE OR ITS SUITABILITY AS A BASIS FOR CONSTRUCTION DRAWINGS.
SHOULD DISCREPANCIES BE ENCOUNTERED DURING CONSTRUCTION BETWEEN THE SURVEY DATA AND ACTUAL FIELD DATA, CONTACT HENRY AND HYMAS PTY. LTD. THE FOLLOWING NOTES HAVE BEEN TAKEN DIRECTLY FROM ORIGINAL SURVEY DOCUMENTS.
DATUM A.H.D.

FOR DA ONLY

SURVEY INFORMATION
SURVEYED BY
CONSULTING SURVEYORS
DENNY LINKER & CO.
DATUM: A.H.D.

REVISION	AMENDMENT	DRAWN	DESIGNED	DATE
02	ISSUED FOR DA	JK	LV	16.07.2020
01	PRELIMINARY ISSUE	KR	LV	05.12.2019

Client: FRENCHMANS LODGE PROPERTIES PTY LTD
Architect: BOFFA ROBERTSON GROUP

This drawing and design remains the property of Henry & Hymas and may not be copied in whole or in part without the prior written approval of Henry & Hymas.

Level 5,
79 Victoria Avenue
Chatswood NSW 2067
Telephone +61 2 9417 8400
Facsimile +61 2 9417 8337
Email email@hhconsult.com.au
Web www.henryandhymas.com.au
henry&hymas

Project: SUMMIT CARE
11-19 FRENCHMANS ROAD, RANDWICK NSW

Title: COVER SHEET, DRAWING SCHEDULE, NOTES & LOCALITY SKETCH

Drawn	Designed	Date
K.Rom	L.Villa	SEP 2019
Checked	Approved	Scale @A1
T.Rozehnal	A.Francis	NTS

Drawing number: 19826_DA_C000
Revision: 02

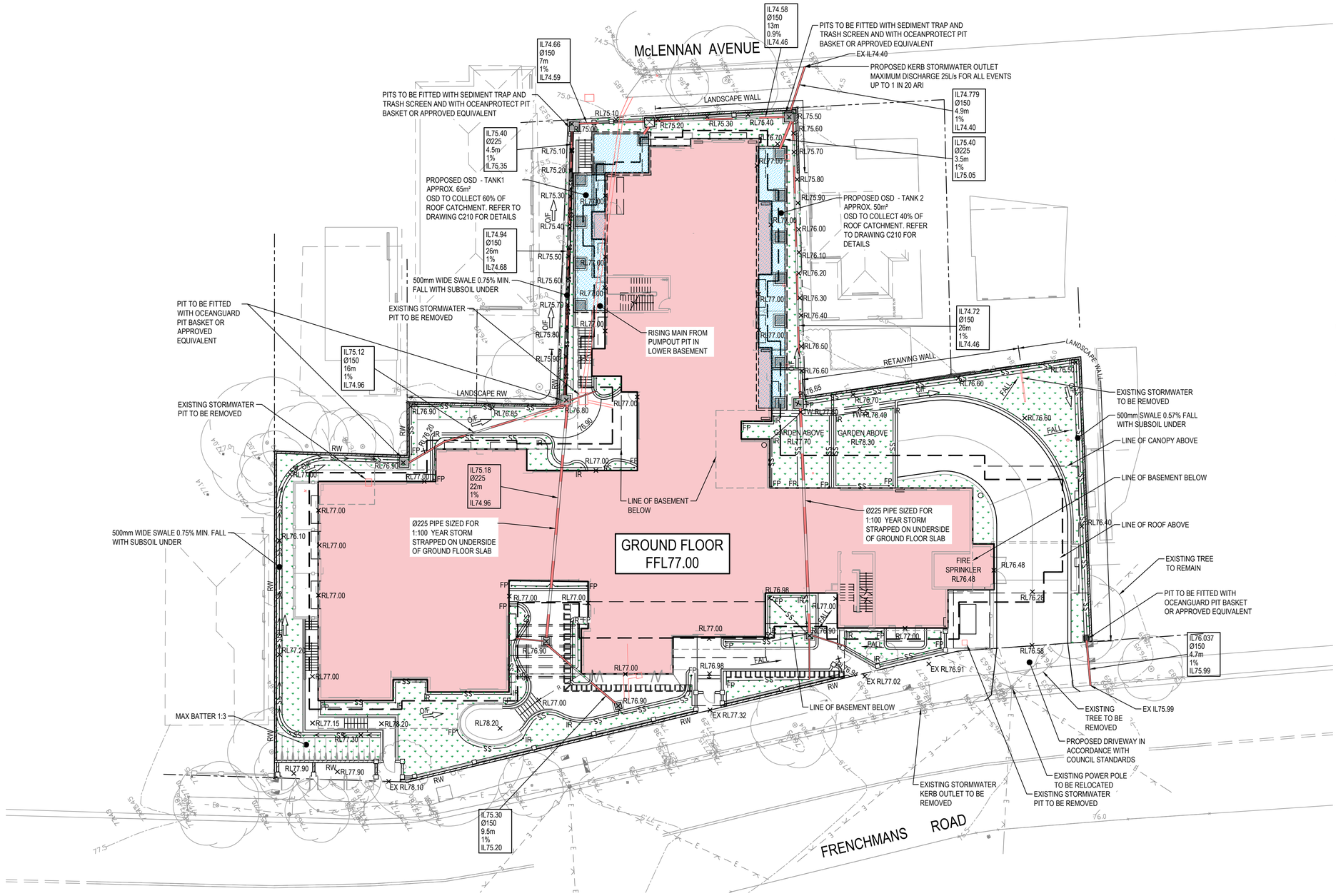

LEGEND

- EXISTING BOUNDARY
- ROOF ABOVE
- BUILDING BELOW (BASEMENT)
- EXISTING ELECTRICAL OVERHEAD LINE
- PROPOSED RIDGE LINE
- EXISTING STORMWATER
- PROPOSED DISH DRAIN
- PROPOSED JUNCTION PITS
- PROPOSED SURFACE INLET PITS
- PROPOSED STORMWATER PIPE
- RL76.50 — PROPOSED SPOT LEVEL
- RW — PROPOSED RETAINING WALL
- PROPOSED LANDSCAPE WALL
- SS — PROPOSED SUBSOIL LINE
- FP — PROPOSED FLUSHING POINT
- IR — PROPOSED INTERMEDIATE RISER
- PROPOSED BATTER LINE

IL74.72 / Ø150 / 26m / 1% / IL74.46
- STORMWATER UPSTREAM INVERT RL.
- STORMWATER PIPE DIAMETER & CLASS
- STORMWATER PIPE LENGTH
- STORMWATER PIPE GRADE
- STORMWATER DOWNSTREAM INVERT RL.

NOTE:
ALL STORMWATER PITS TO HAVE Ø100 UPVC SLOTTED SUBSOILO PIPES CONNECTED TO THEM. THESE SUBSOIL TO EXTEND 3m UPSTREAM OF THE PIT AT A MNIMUM GRADE.

NOTE:
SERVICES SHOWN ON THIS DRAWING ARE DEPICTED FROM SERVICES SEARCH PLANS AND CAN NOT BE GUARANTEED. THE EXACT DEPTH AND LOCATION OF ALL IN-GROUND UTILITIES TO BE DETERMINED BY POT HOLING OR CABLE SEARCH.

NOTE:
CONTRACTOR TO INVESTIGATE PRESENCE OF EXISTING UTILITIES, SIZE AND DEPTH OF ALL IN-GROUND UTILITIES, PRIOR TO CONSTRUCTION. SERVICES SHOWN ON THIS DRAWING DEPICTED FROM SERVICES SEARCH PLANS AND CANNOT BE GUARANTEED.

GENERAL ARRANGEMENT PLAN
GROUND FLOOR

SCALE 1:200

0 4 8 12 16 20m
4 3 2 1
SCALE 1:200

FOR DA ONLY

SURVEY INFORMATION
SURVEYED BY CONSULTING SURVEYORS DENNY LINKER & CO.
DATUM: A.H.D.

REVISION	AMENDMENT	DRAWN	DESIGNED	DATE
03	ISSUED FOR DA	JK	LV	28.08.2020
02	ISSUED FOR DA	KR	LV	16.07.2020
01	PRELIMINARY ISSUE	KR	LV	05.12.2019

Client: FRENCHMANS LODGE PROPERTIES PTY LTD
Architect: BOFFA ROBERTSON GROUP

This drawing and design remains the property of Henry & Hymas and may not be copied in whole or in part without the prior written approval of Henry & Hymas.

Level 5, 79 Victoria Avenue Chatswood NSW 2067
Telephone +61 2 9417 8400
Facsimile +61 2 9417 8337
Email email@hhconsult.com.au
Web www.henryandhymas.com.au
henry&hymas

Project: SUMMIT CARE 11-19 FRENCHMANS ROAD, RANDWICK NSW
Title: GENERAL ARRANGEMENT PLAN GROUND FLOOR

Drawn	Designed	Date
K.Rom	L.Villa	SEP 2019
Checked	Approved	Scale @A1
T.Rozehnal	A.Francis	1:200

Drawing number: 19826_DA_C100
Revision: 03

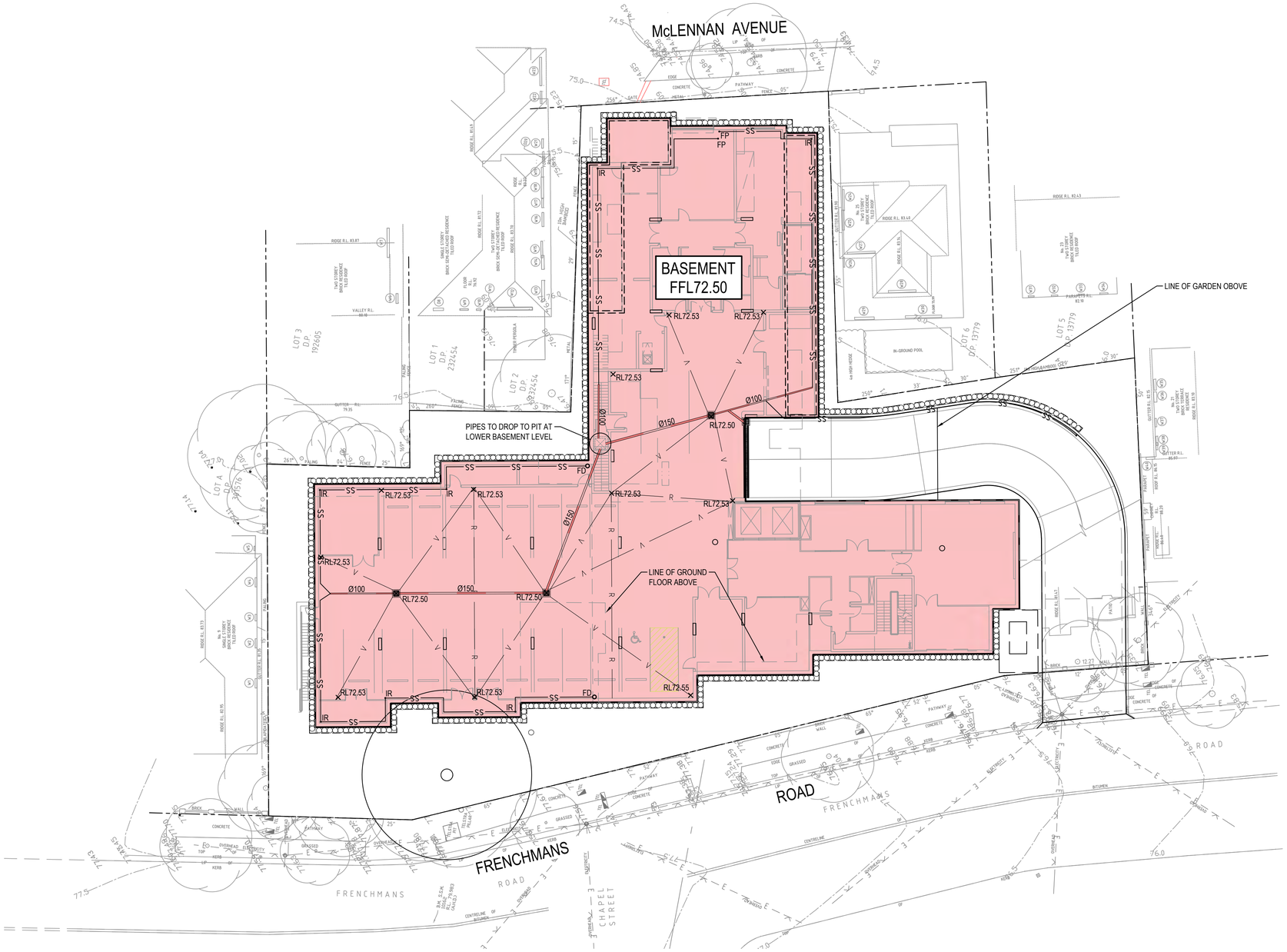

LEGEND

	EXISTING BOUNDARY
	BUILDING ABOVE (GROUND FLOOR)
R	PROPOSED RIDGE LINE
V	PROPOSED VALLEY LINE
FD	PROPOSED FLOOR DRAIN
	PROPOSED GRATED DRAIN
	PROPOSED STORMWATER PIPE
SS	PROPOSED SUBSOIL LINE
	PROPOSED JUNCTION PITS
	PROPOSED SURFACE INLET PITS
FP	PROPOSED FLUSHING POINT
IR	PROPOSED INTERMEDIATE RISER

GENERAL ARRANGEMENT PLAN
BASEMENT

SCALE 1:200

0 4 8 12 16 20m

4 3 2 1

SCALE 1:200

FOR DA ONLY

SURVEY INFORMATION
SURVEYED BY
CONSULTING SURVEYORS
DENNY LINKER & CO.
DATUM: A.H.D.

REVISION	AMENDMENT	DRAWN	DESIGNED	DATE
02	ISSUED FOR DA	JK	LV	16.07.2020
01	PRELIMINARY ISSUE	KR	LV	05.12.2019

Client
FRENCHMANS LODGE PROPERTIES PTY LTD

Architect
BOFFA ROBERTSON GROUP

This drawing and design remains the property of Henry & Hymas and may not be copied in whole or in part without the prior written approval of Henry & Hymas.

Level 5,
79 Victoria Avenue
Chatswood NSW 2067

Telephone
+61 2 9417 8400
Facsimile
+61 2 9417 8337
Email
email@hhconsult.com.au
Web
www.henryandhymas.com.au

henry&hymas

Project
SUMMIT CARE
11-19 FRENCHMANS ROAD, RANDWICK NSW

Title
GENERAL ARRANGEMENT PLAN
BASEMENT

Drawn	Designed	Date
K.Rom	L.Villa	SEP 2019
Checked	Approved	Scale @A1
T.Rozehnal	A.Francis	1:200

Drawing number: 19826_DA_C101

Revision: 02

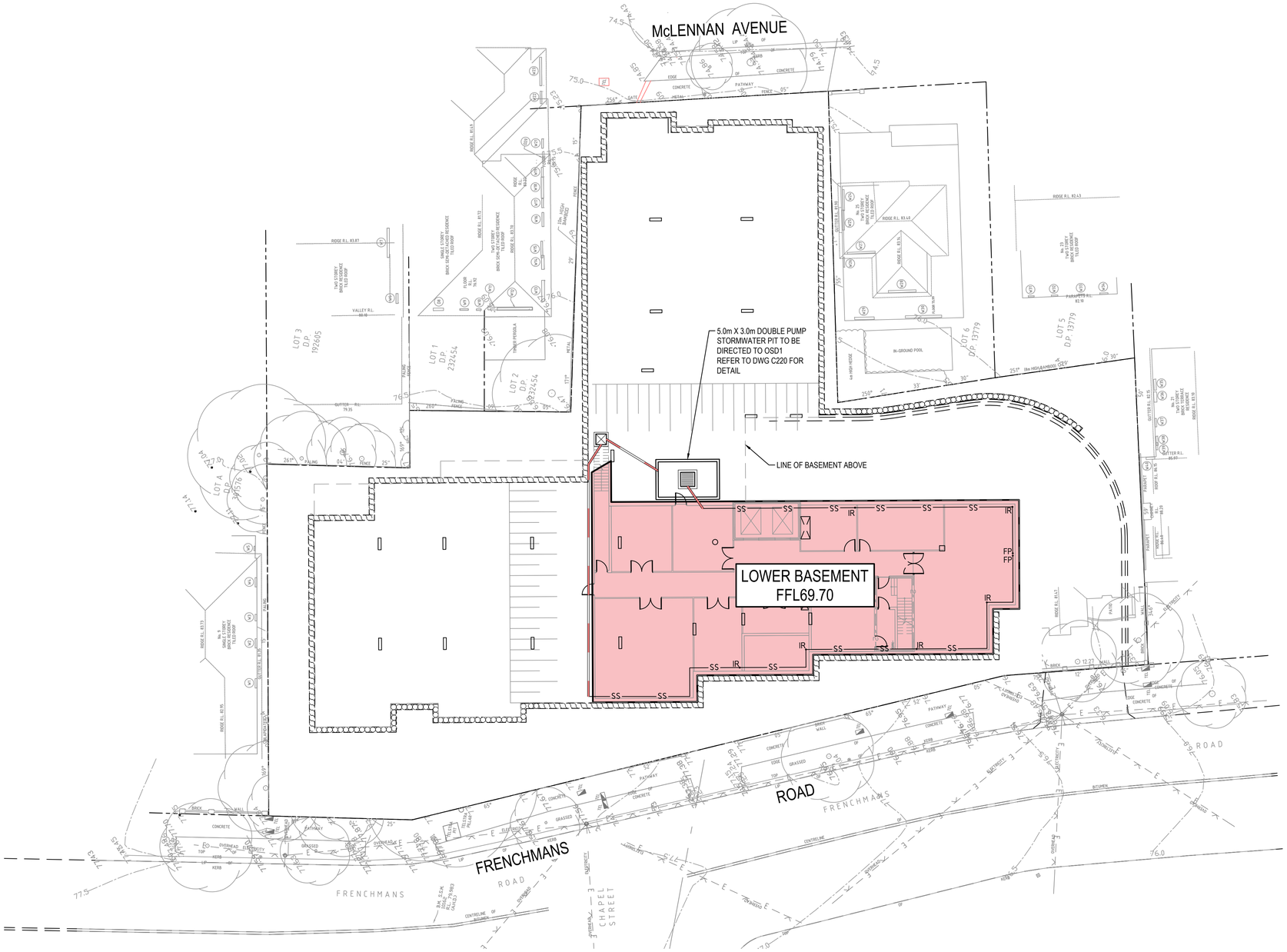

LEGEND

- EXISTING BOUNDARY
- BUILDING ABOVE
- GROUND FLOOR ABOVE
- PROPOSED SUBSOIL LINE
- PROPOSED JUNCTION PITS
- PROPOSED SURFACE INLET PITS
- PROPOSED STORMWATER PIPE
- FP — PROPOSED FLUSHING POINT
- IR — PROPOSED INTERMEDIATE RISER
- PROPOSED BATTER LINE

GENERAL ARRANGEMENT PLAN
LOWER BASEMENT

SCALE 1:200

0 4 8 12 16 20m
4 3 2 1
SCALE 1:200

FOR DA ONLY

SURVEY INFORMATION
SURVEYED BY
CONSULTING SURVEYORS
DENNY LINKER & CO.
DATUM: A.H.D.

REVISION	AMENDMENT	DRAWN	DESIGNED	DATE	REVISION	AMENDMENT	DRAWN	DESIGNED	DATE
02	ISSUED FOR DA	JK	LV	16.07.2020					
01	PRELIMINARY ISSUE	KR	LV	05.12.2019					

Client
FRENCHMANS LODGE PROPERTIES PTY LTD

Architect
BOFFA ROBERTSON GROUP

This drawing and design remains the property of Henry & Hymas and may not be copied in whole or in part without the prior written approval of Henry & Hymas.

Level 5,
79 Victoria Avenue
Chatswood NSW 2067

Telephone
+61 2 9417 8400
Facsimile
+61 2 9417 8337
Email
email@hhconsult.com.au
Web
www.henryandhymas.com.au

henry&hymas

Project
SUMMIT CARE
11-19 FRENCHMANS ROAD, RANDWICK NSW

Title
GENERAL ARRANGEMENT PLAN
LOWER BASEMENT

Drawn	Designed	Date
K.Rom	L.Villa	SEP 2019
Checked	Approved	Scale @A1
T.Rozehnal	A.Francis	1:200

Drawing number
19826_DA_C102

Revision
02

BUS ROUTE PLAN

SCALE: NTS

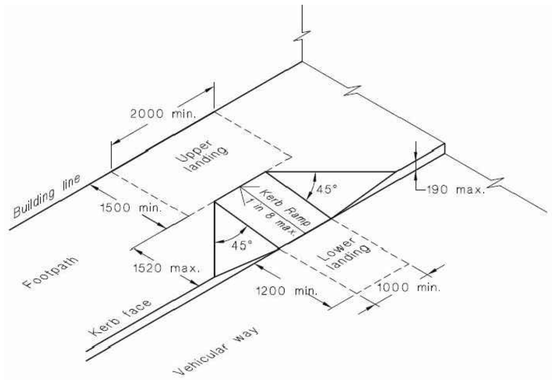

AUSTRALIAN STANDARD A1428.1 KERB RAMP

SCALE: NTS

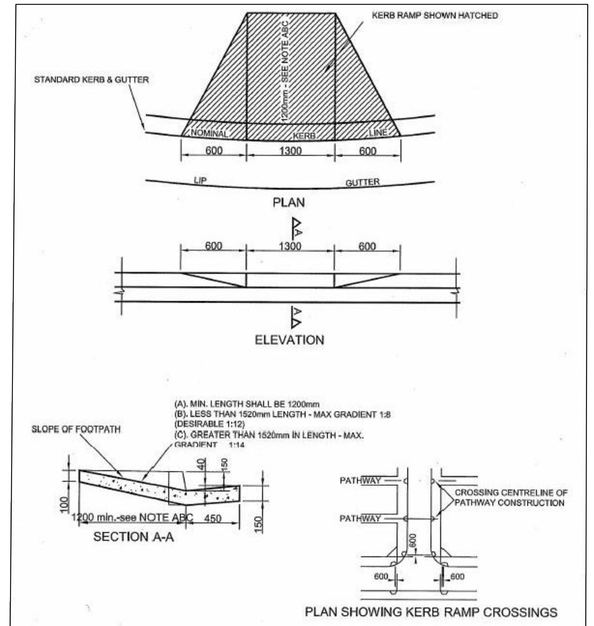

NOTES:
1. KERB RAMPS SHOULD BE PROVIDED AT APPROVED SITES ON CORNERS OF STREET INTERSECTIONS AND AT ESTABLISHED PEDESTRIAN CROSSINGS BETWEEN STREET INTERSECTIONS.
2. THE NUMBER AND POSITIONS OF RAMPS IS TO BE DETERMINED AFTER CONSIDERATION OF THE GENERAL MOVEMENT OF PEDESTRIANS. THE LOCATION OF MARKED FOOT CROSSINGS, AND THE POSITION OF ANY EXISTING OBSTACLES SUCH AS TRAFFIC SIGNALS, GULLY PITS, ETC. THE LOCATION OF KERB RAMPS SHOULD BE CAREFULLY PLANNED TO ENSURE THAT USERS ARE NOT PUT AT RISK FROM TRAFFIC OF ANY KIND, BEARING IN MIND THAT THE DISABLED PERSON'S REACTION TIME MAY BE GREATER THAN THAT OF PERSONS HAVING FULL MOBILITY.
3. KERB RAMPS SHOULD BE INSTALLED IN THE KERB IN A MANNER WHICH WILL DIRECT THE USER ACROSS THE ADJACENT ROADWAY BY THE MOST DIRECT ROUTE.
4. KERB RAMPS TO BE LAID ON WELL COMPACTED FINE CRUSHED ROCK BASE MINIMUM THICKNESS 50mm.
5. CONCRETE TO BE OF 32MPa COMPRESSIVE STRENGTH AT 28 DAYS.

DRAWN BY NMcFall	CHECKED J Ingegneri	CITY OF RANDWICK	SCALE: NTS
DESIGNED NMcFall	APPROVED ENGINEER M Shaw	STANDARD KERB RAMP CROSSINGS	PLAN No. SD5
DATE 28/01/10			

COUNCIL STANDARD DETAIL

SCALE: NTS

SKETCH

SURVEY INFORMATION
SURVEYED BY
CONSULTING SURVEYORS
DENNY LINKER & CO.
DATUM: A.H.D.

REVISION	AMENDMENT	DRAWN	DESIGNED	DATE	REVISION	AMENDMENT	DRAWN	DESIGNED	DATE
03	SKETCH	JK	LV	10.11.2020					
02	SKETCH	JK	LV	25.08.2020					
01	SKETCH	JK	LV	20.08.2020					

Client
FRENCHMANS LODGE PROPERTIES PTY LTD

Architect
BOFFA ROBERTSON GROUP

This drawing and design remains the property of Henry & Hymas and may not be copied in whole or in part without the prior written approval of Henry & Hymas.

Level 5,
79 Victoria Avenue
Chatswood NSW 2067

Telephone
+61 2 9417 8400
Facsimile
+61 2 9417 8337
Email
email@hhconsult.com.au
Web
www.henryandhymas.com.au

henry&hymas

Project
SUMMIT CARE
11-19 FRENCHMANS ROAD, RANDWICK NSW

Title
SECTION 138 EXTERNAL WORKS

Drawn	Designed	Date
J.Knight	L.Villa	AUG 2020
Checked	Approved	Scale @A1
B.Seizov	A.Francis	1:200

Drawing number 19826_DA_C103

Revision 03

TYPICAL PIT CHAMBER SIZES

IT IS THE CONTRACTORS RESPONSIBILITY TO SELECT PIT CHAMBER SIZE WITH REGARDS TO PIPE SIZE, DEPTH TO INVERT AND SKEW ANGLE. REFER SKETCHES BELOW.

1. SELECT PIT CHAMBER USING THE STEPS BELOW:
2. SELECT PIT CHAMBER SIZE DEPENDING ON THE PIPE DIAMETERS.
3. CHECK PIT CHAMBER SIZE TO SATISFY DEPTH TO INVERT REQUIREMENTS.
   CHECK PIT CHAMBER DIMENSIONS TO SATISFY THE SKEW ANGLE IN THE TABLE.

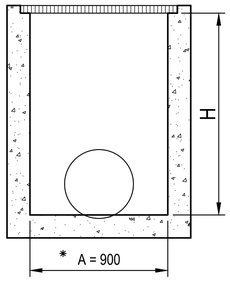

SECTION
NTS

*A = 600 FOR PIPES UP TO 375 DIA.

1 PIT CHAMBER DIMENSIONS FOR PIPES UP TO 600 DIA.

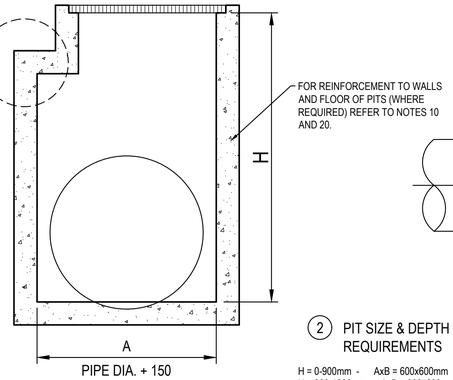

SECTION
NTS

1 PIT CHAMBER FOR PIPES GREATER THAN 600 DIA.

FOR B = 600mm - MAX. SIDE ENTRY PIPE AT 45° SKEW = 225mm
FOR B = 900mm - MAX. SIDE ENTRY PIPE AT 45° SKEW = 375mm
FOR B = 1200mm - MAX. SIDE ENTRY PIPE AT 45° SKEW = 600mm
FOR B = 1500mm - MAX. SIDE ENTRY PIPE AT 45° SKEW = 825mm
FOR B = 1900mm - MAX. SIDE ENTRY PIPE AT 45° SKEW = 1050mm

2 PIT SIZE & DEPTH REQUIREMENTS

H = 0-900mm - AxB = 600x600mm
H = 900-1200mm - AxB = 900x600mm
H = >1200mm - AxB = 900x900mm

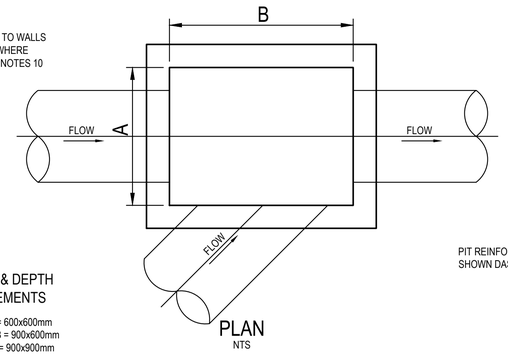

PLAN
NTS

3 PIT CHAMBER FOR SIDE ENTRY ON SKEW

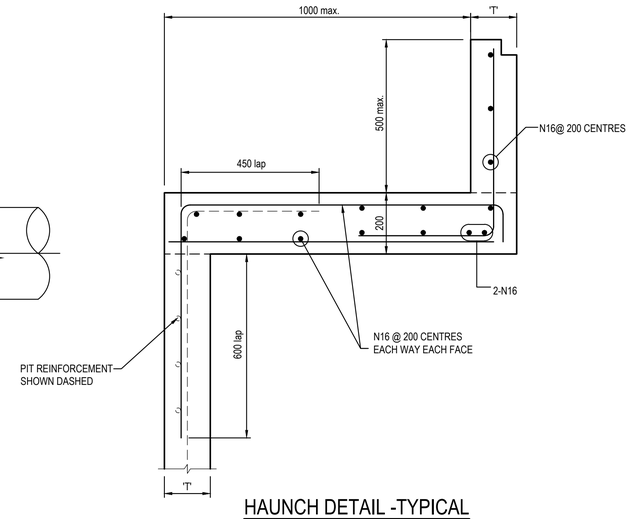

HAUNCH DETAIL -TYPICAL
SCALE 1:10

DRAINAGE NOTES:

1. ALL STORMWATER WORK TO COMPLY WITH AS 3500 PART 3.

2. CONTRACTOR SHALL BE RESPONSIBLE FOR MAINTAINING THE MINIMUM COVER OF 600mm ON ALL PIPES.

3. PROTECTION OF PIPES DUE TO LOADS EXCEEDING W7 WHEEL LOAD SHALL BE THE CONTRACTOR'S RESPONSIBILITY.

4. BEDDING TYPE SHALL BE TYPE H2 FOR RCP. WHERE NECESSARY THE OVERLAY ZONE SHALL BE REDUCED TO ACCOMMODATE PAVEMENT REQUIREMENTS. REFER TO THIS DRAWING FOR DETAILS.

5. MINIMUM COVER OVER EXISTING PIPES FOR PROTECTION DURING CONSTRUCTION SHALL BE 800mm.

6. NO CONSTRUCTION LOADS SHALL BE APPLIED TO PLASTIC PIPES.

7. FINISHED SURFACE LEVELS SHOWN ON LAYOUT PLAN DRGS TAKE PRECEDENCE OVER DESIGN DRAINAGE SURFACE LEVELS.

8. ALL PIPES UP TO AND INCLUDING 300 DIA. SHALL BE SOLVENT OR RUBBER RING JOINTED PVC CLASS SH PIPE TO AS1260. ALL OTHER PIPES TO BE RCP USING CLASS 2 RUBBER RING JOINTED PIPE. HARDIES FRC PIPE MAY BE USED IN LIEU OF RCP IF DESIRED IN GROUND. ALL AERIAL PIPES TO BE PVC CLASS SH.

9. ALL PITS IN NON TRAFFICABLE AREAS TO BE PREFABRICATED POLYESTER CONCRETE "POLYCRETE" WITH "LIGHT DUTY" CLASS B GALV. MILD STEEL GRATING AND FRAME.
ALL PITS IN TRAFFICABLE AREAS (CLASS "D" LOADING MAX) TO HAVE 150mm THICK CONCRETE WALLS AND BASE CAST IN-SITU f'c=32 MPa, REINFORCED WITH N12-200 BOTH LOADING WAYS CENTRALLY PLACE .U.N.O. ON SEPARATE DESIGN DRAWINGS IN THIS SET. GALV.MILD STEEL GRATING AND FRAME TO SUIT DESIGN LOADING. PRECAST PITS, RECTANGULAR OR CIRCULAR IN SHAPE, MAY BE USED IN LIEU AND SHALL COMPLY WITH RELEVANT AUSTRALIAN STANDARDS.

10. ALL PITS, GRATINGS AND FRAMES SHALL BE INSTALLED IN ACCORDANCE WITH THE MANUFACTURERS SPECIFICATION AND TO BE IN ACCORDANCE WITH AS3500.3 AND AS3996.

11. PIT CHAMBER DIMENSIONS ARE TO BE SELECTED TO SATISFY THE FOLLOWING:
- PIPE SIZE
- DEPTH TO INVERT
- SKEW ANGLE
  REFER TYPICAL PIT CHAMBER DETAILS BELOW
IF PIT LID SIZE IS SMALLER THAN THE PIT CHAMBER SIZE THEN THE PIT LID IS TO BE CONSTRUCTED ON THE CORNER OF THE PIT CHAMBER WITH THE STEP IRONS DIRECTLY BELOW. ALTERNATIVELY THE PIT LID TO BE USED, IS TO BE THE SAME SIZE AS THE PIT CHAMBER.

12. FOR PIPE SIZES GREATER THAN Ø300mm, PIT FLOOR IS TO BE BENCHED TO FACILITATE FLOW.

13. GALVANISED STEP IRONS SHALL BE PROVIDED AT 300 CTS FOR PITS HAVING A DEPTH EXCEEDING 1200mm. SUBSOIL DRAINAGE PIPE SHALL BE PROVIDED IN PIPE TRENCHES ADJACENT TO INLET PIPES. (MINIMUM LENGTH 3m).

14. ALL SUBSOIL PIPES SHALL BE 100mm SLOTTED PVC IN A FILTER SOCK, UNO, WITH 3m INSTALLED UPSTREAM OF ALL PITS.

15. ALL PIPEWORK SHALL HAVE MINIMUM DIAMETER 100.

16. MINIMUM GRADE FOR ROOFWATER DRAINAGE LINES SHALL BE 1%.

17. ALL PIPE JUNCTIONS AND TAPER UP TO AND INCLUDING 300 DIA. SHALL BE VIA PURPOSE MADE FITTINGS.

18. ALL ROOF DRAINAGE TO BE INSTALLED IN ACCORDANCE WITH AS3500, PART 3. TESTING TO BE UNDERTAKEN AND REPORTS PROVIDED TO THE SUPERINTENDENT.

19. LOCATION OF THE DIRECT DOWN PIPE CONNECTIONS MAY VARY ON SITE TO SUIT SITE CONDITIONS, WHERE CONNECTION SHOWN ON LONG SECTIONS CHAINAGES ARE INDICATIVE ONLY.

20. PITS IN EXCESS OF 1.5 m DEEP TO HAVE WALL AND FLOOR THICKNESS INCREASED TO 200mm. REINFORCED WITH N12@200 CTS CENTRALLY PLACED BOTH WAYS THROUGHOUT U.N.O.ON SEPARATE DESIGN DRAWINGS IN THIS SET. IF DEPTH EXCEEDS 5m CONTACT ENGINEER.

21. SUBSOIL DRAINAGE LINES FOR LANDSCAPE AREA NOT SHOWN ON THESE DRAWINGS. REFER TO LANDSCAPING PLANS FOR DETAILS.

22. ALL STORMWATER PITS TO HAVE Ø100 uPVC SLOTTED SUBSOIL PIPES CONNECTED TO THEM. THESE SUBSOILS TO EXTEND 3m UPSTREAM OF THE PIT AT A MINIMUM GRADE.

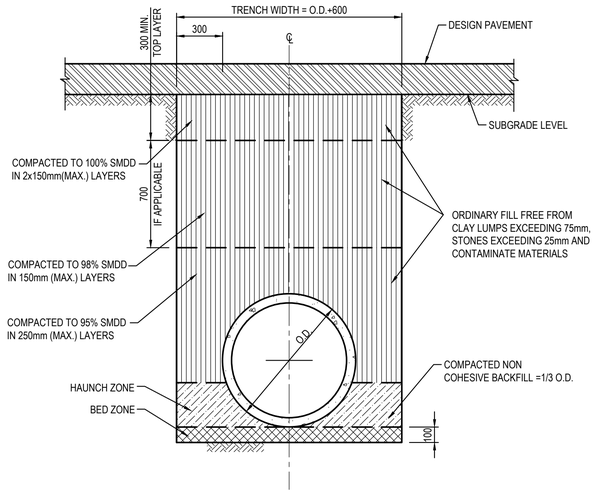

PIPE TRENCH INSTALLATION BENEATH PAVEMENT
(H1 & H2 SUPPORT)
SCALE 1:20

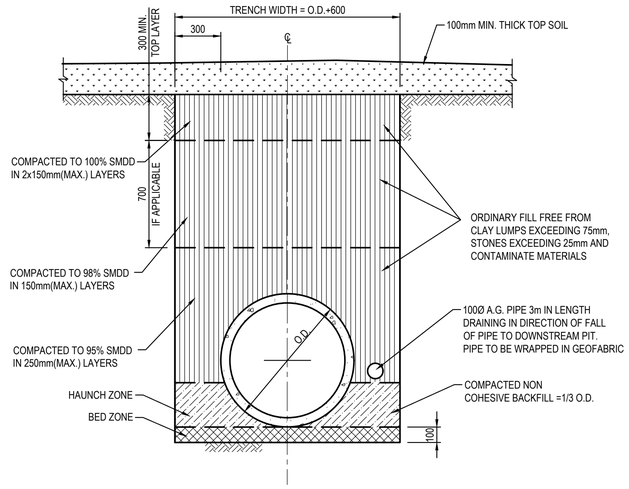

PIPE TRENCH INSTALLATION IN LANDSCAPE AREAS
(H1 & H2 SUPPORT)
SCALE 1:20

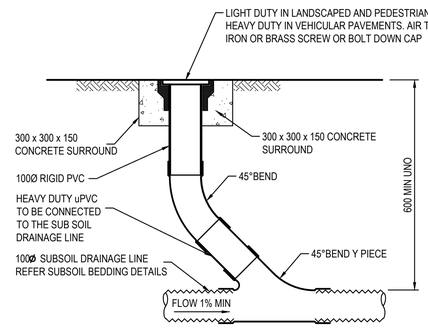

INTERMEDIATE RISER (IR)
SCALE 1:10
NOTE: SLOTTED RIGID PVC PIPE AND FITTINGS MAY BE USED

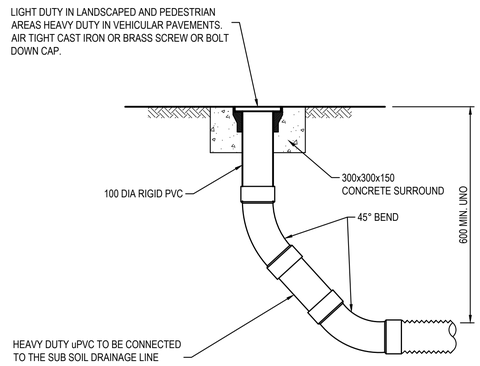

FLUSHING POINT (FP)
SCALE 1:10
NOTE: SLOTTED RIGID PVC PIPE AND FITTINGS MAY BE USED

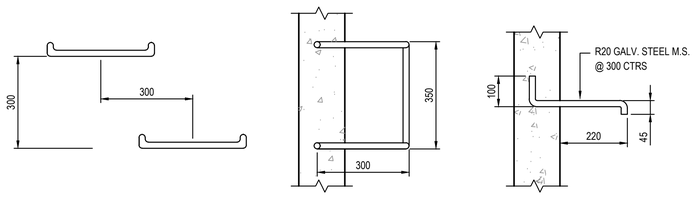

ELEVATION PLAN SECTION

TYPICAL STEP IRON DETAIL
SCALE 1:10

0 200 400 600 800 1000mm
200 100
SCALE 1:10

0 400 800 1200 1600 2000mm
400 200
SCALE 1:20

FOR DA ONLY

SURVEY INFORMATION
SURVEYED BY CONSULTING SURVEYORS DENNY LINKER & CO.
DATUM: A.H.D.

REVISION	AMENDMENT	DRAWN	DESIGNED	DATE
02	PRELIMINARY ISSUE	JK	LV	16.07.2020
01	PRELIMINARY ISSUE	KR	LV	05.12.2019

Client: FRENCHMANS LODGE PROPERTIES PTY LTD
Architect: BOFFA ROBERTSON GROUP

This drawing and design remains the property of Henry & Hymas and may not be copied in whole or in part without the prior written approval of Henry & Hymas.

Level 5, 79 Victoria Avenue Chatswood NSW 2067
Telephone +61 2 9417 8400
Facsimile +61 2 9417 8337
Email email@hhconsult.com.au
Web www.henryandhymas.com.au
henry&hymas

Project: SUMMIT CARE
11-19 FRENCHMANS ROAD, RANDWICK NSW

Title: STORMWATER MISCELLANEOUS DETAILS

Drawn	Designed	Date
K.Rom	L.Villa	SEP 2019
Checked	Approved	Scale @A1
T.Rozehnal	A.Francis	AS NOTED

Drawing number: 19826_DA_C200
Revision: 02

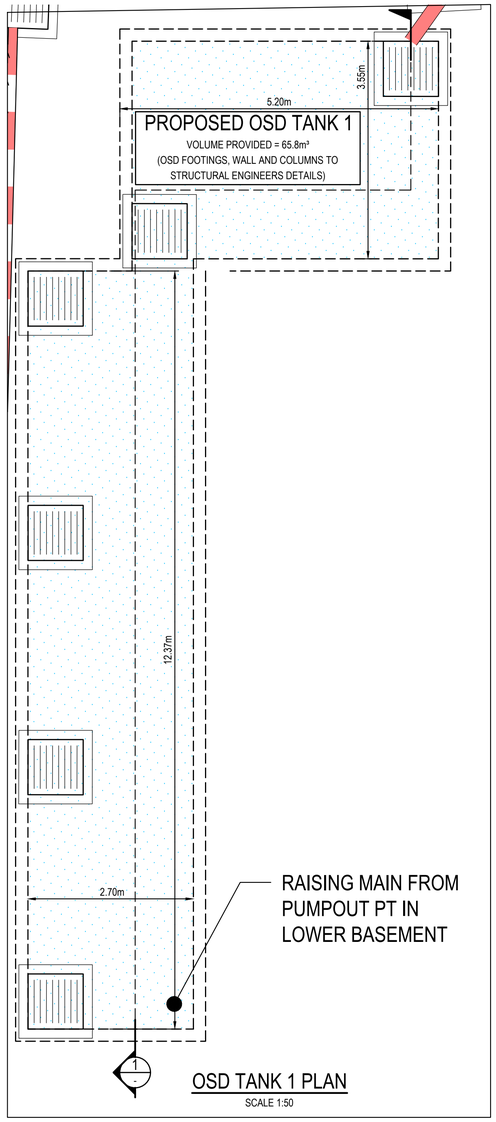

OSD TANK 1 PLAN

SCALE 1:50

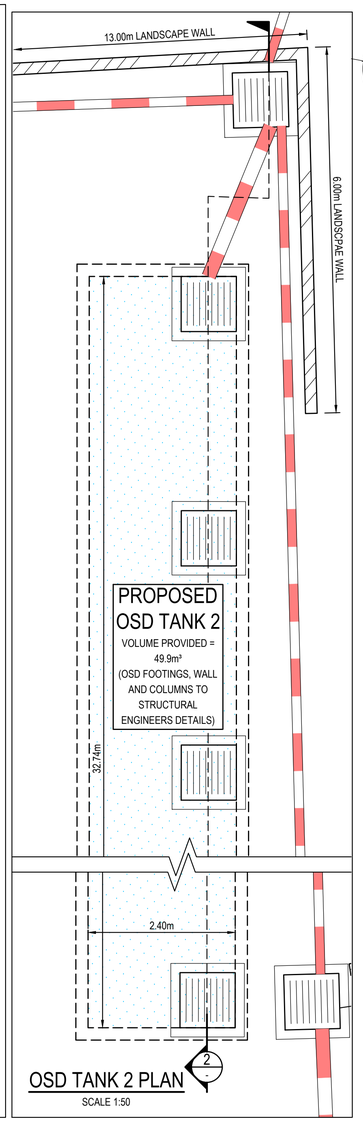

OSD TANK 2 PLAN

SCALE 1:50

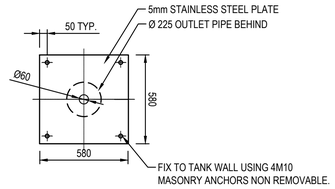

ORIFICE PLATE DETAIL

SCALE 1:20

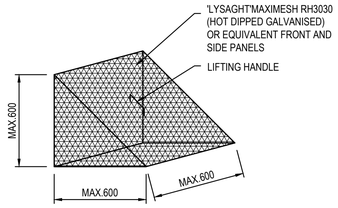

TRASH SCREEN DETAIL

N.T.S

TRASH SREEN NOTES

1. MAXIMESH SCREENS MUST BE PLACED SUCH THAT THE LONG AXIS OF THE OVAL SHAPED HOLES ARE ORIENTATED HORIZONTALLY WITH THE PORTRUDING LIP ANGLED UPWARDS AND FACING TOWRADS THE OUTLET.
2. THE SCREEN IS TO BE FORMED BY WELDING TWO TRIANGULAR MAXIMESH (OR EQUIVALENT) PANELS TO A RECTANGULAR FRONT MAXIMESH PANEL(OR EQUIVALENT)

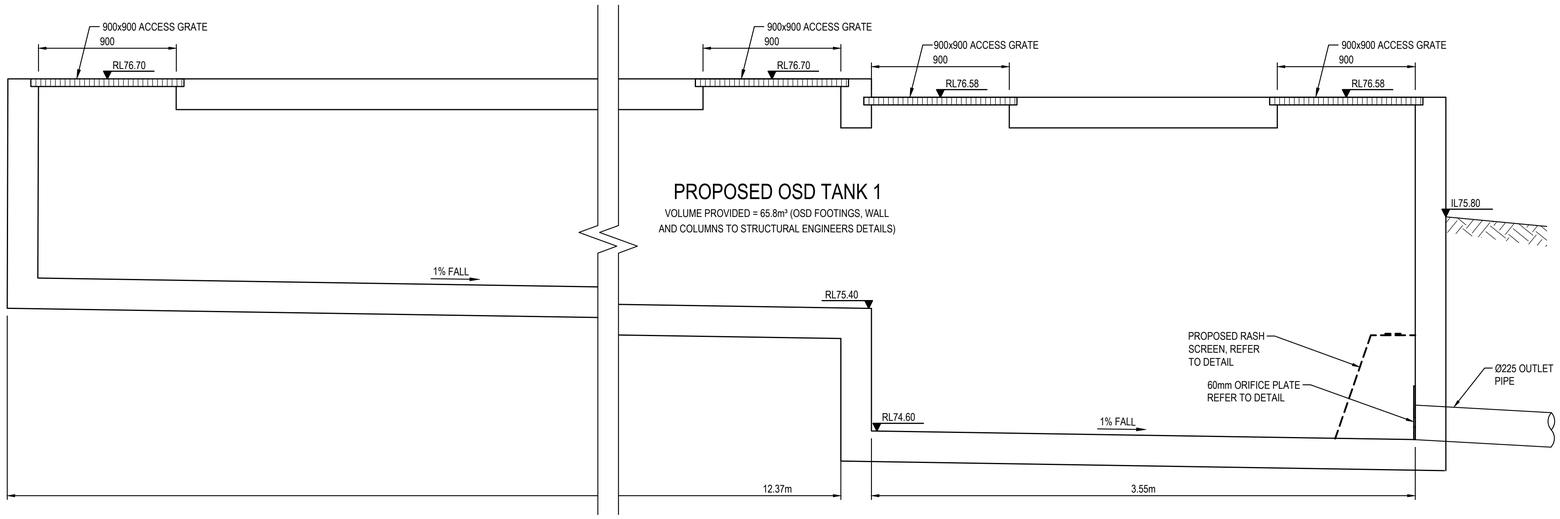

SECTION 1

SCALE: 1:20

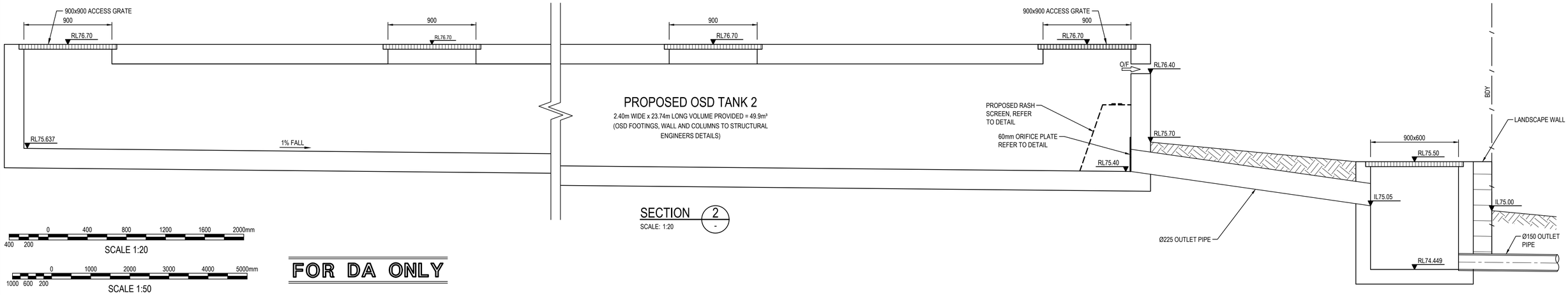

SECTION 2

SCALE: 1:20

0 400 800 1200 1600 2000mm
400 200
SCALE 1:20

0 1000 2000 3000 4000 5000mm
1000 600 200
SCALE 1:50

FOR DA ONLY

SURVEY INFORMATION
SURVEYED BY
CONSULTING SURVEYORS
DENNY LINKER & CO.
DATUM: A.H.D.

REVISION	AMENDMENT	DRAWN	DESIGNED	DATE	REVISION	AMENDMENT	DRAWN	DESIGNED	DATE
02	ISSUED FOR DA	JK	LV	16.07.2020					
01	PRELIMINARY ISSUE	KR	LV	05.12.2019					

Client
FRENCHMANS LODGE PROPERTIES PTY LTD

Architect
BOFFA ROBERTSON GROUP

This drawing and design remains the property of Henry & Hymas and may not be copied in whole or in part without the prior written approval of Henry & Hymas.

Level 5,
79 Victoria Avenue
Chatswood NSW 2067

Telephone
+61 2 9417 8400
Facsimile
+61 2 9417 8337
Email
email@hhconsult.com.au
Web
www.henryandhymas.com.au

henry&hymas

Project
SUMMIT CARE
11-19 FRENCHMANS ROAD, RANDWICK NSW

Title
OSD SECTIONS & DETAILS

Drawn	Designed	Date
K.Rom	L.Villa	SEP 2019
Checked	Approved	Scale @A1
T.Rozehnal	A.Francis	AS NOTED

Drawing number
19826_DA_C210

Revision
02

STORMWATER DESIGN SUMMARY

TOTAL SITE AREA: 2709 m²
SITE DISCHARGE DIRECTED VIA GRAVITY IN ACCORDANCE WITH COUNCIL REQUIREMENTS.

ON-SITE DETENTION DESIGN SUMMARY

A DRAINS MODEL HAS BEEN PREPARED TO DETERMINE THE PRE-DEVELOPMENT AND POST-DEVELOPMENT STORMWATER RUNOFF. THE DEVELOPED STORMWATER RUNOFF HAS BEEN LIMITED TO THE PERMISSIBLE KERB OUTLET SITE DISCHARGE OF 25L/S FOR ALL STORM EVENTS UP TO AND INCLUDING 20YEAR ARI, IN ACCORDANCE WITH SECTION 3.1 OF RANDWICK CITY COUNCIL PRIVATE STORMWATER CODE.

PERMISSIBLE SITE DISCHARGE (PSD): 25L/S

YR	POST-DEVELOPMENT (L/S)
5	23
10	25
100	30

THE VOLUME OF ON SITE STORAGE HAS BEEN DETERMINED USING THE MASS CURVE TECHNICQUE AS PER COUNCIL'S GUIDELINES. REFER TO CALCULATION TABLES.

TOTAL ON -SITE DETENTION VOLUME PROVIDED: 110m³

OSD 1 VOLUME: 65 m³
OSD 1 OUTLET CONTROL: Ø60mm ORIFICE

OSD 2 VOLUME: 50 m³
OSD 2 OUTLET CONTROL: Ø60mm ORIFICE

INTENSITY (mm/hr)

	ARI						
DURATION (min)	1	2	5	10	20	50	100
5	106.00	134.00	138.00	187.00	213.00	246.00	271.00
6	98.80	126.00	158.00	176.00	200.00	213.00	254.00
10	80.90	103.00	131.00	146.00	137.00	193.00	214.00
20	59.50	76.50	98.20	111.00	127.00	149.00	165.00
30	48.50	62.60	81.00	91.60	106.00	124.00	138.00
60	32.80	42.40	55.40	63.00	72.90	86.10	96.00
120	21.00	27.30	35.70	40.70	47.20	55.80	62.30
180	16.00	20.70	27.10	30.90	35.90	42.40	47.30
360	9.96	12.90	16.80	19.20	22.20	26.10	29.20
720	6.30	8.14	10.60	12.00	13.90	16.40	18.30
1440	4.09	5.29	6.87	7.79	9.00	10.60	11.80
2880	2.65	3.42	4.44	5.03	5.81	6.83	7.61
4320	1.98	2.55	3.31	3.74	4.31	5.06	5.64

VOLUME IN (m^3)

ARI						
1	2	5	10	20	50	100
23.99133	30.32867	31.23400	42.32433	48.20900	55.67800	61.33633
26.83408	34.22160	42.91280	47.80160	54.32000	57.85080	68.98640
36.62073	46.62467	59.29933	66.08933	75.59533	87.36467	96.87067
53.86733	69.25800	88.90373	100.49200	114.97730	134.89470	149.38000
65.86300	85.01080	109.99800	124.39280	143.94800	168.39200	187.40400
89.08480	115.15840	150.46640	171.10800	197.99640	233.84760	260.73600
114.07200	148.29360	193.92240	221.08240	256.39040	303.10560	338.41360
130.36800	168.66360	220.81080	251.77320	292.51320	345.47520	385.40040
162.30820	210.21840	273.77280	312.88320	361.77120	425.32560	475.84320
205.32960	265.29890	345.47520	391.10400	453.02880	534.50880	596.43360
266.60260	344.82340	447.81410	507.78340	586.65600	690.95040	769.17120
345.47520	445.85860	578.83390	655.75100	757.43810	890.41340	992.10050
387.19300	498.65760	647.27710	731.36450	842.82910	989.49310	1102.91300

VOLUME OUT (m^3)

ARI						
1	2	5	10	20	50	100
7.5	7.5	7.5	7.5	7.5	7.5	7.5
9	9	9	9	9	9	9
15	15	15	15	15	15	15
30	30	30	30	30	30	30
45	45	45	45	45	45	45
90	90	90	90	90	90	90
180	180	180	180	180	180	180
270	270	270	270	270	270	270
540	540	540	540	540	540	540
1080	1080	1080	1080	1080	1080	1080
2160	2160	2160	2160	2160	2160	2160
4320	4320	4320	4320	4320	4320	4320
6480	6480	6480	6480	6480	6480	6480

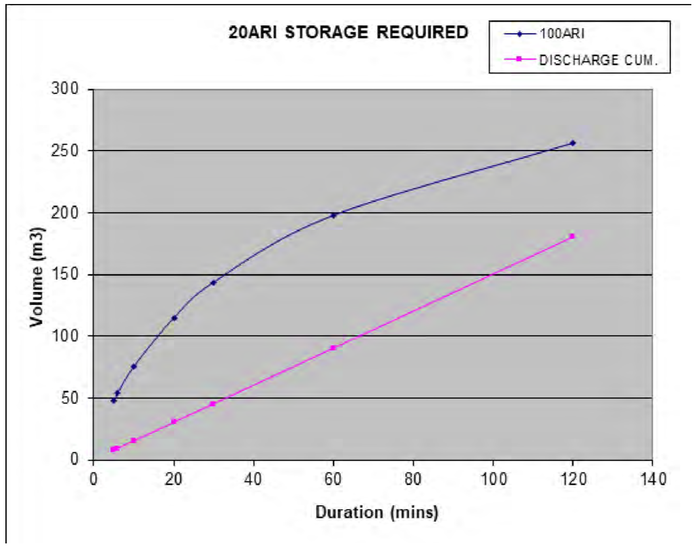

STORAGE REQUIRED (m^3)

	ARI						
DURATION (min)	1	2	5	10	20	50	100
5	16.49133	22.82867	23.73400	34.82433	40.70900	48.17800	53.83633
6	17.83408	25.22160	33.91280	38.80160	45.32000	48.85080	59.98640
10	21.62073	31.62467	44.29933	51.08933	60.59533	72.36467	81.87067
20	23.86733	39.25800	58.90373	70.49200	84.97733	104.89470	119.38000
30	20.86300	40.01080	64.99800	79.39280	98.94800	123.39200	142.40400
60	-0.91520	25.15840	60.46640	81.10800	107.99640	143.84760	170.73600
120	-65.92800	-31.70640	13.92240	41.08240	76.39040	123.10560	158.41360
180	-139.63200	-101.33640	-49.18920	-18.22680	22.51320	75.47520	115.40040
360	-377.69180	-329.78160	-266.22720	-227.11680	-178.22880	-114.67440	-64.15680
720	-874.67040	-814.70110	-734.52480	-688.89600	-626.97120	-545.49120	-483.56640
1440	-1893.39700	-1815.17700	-1712.18600	-1652.21700	-1573.34400	-1469.05000	-1390.82900
2880	-3974.52500	-3874.14100	-3741.16600	-3664.24900	-3562.56200	-3429.58700	-3327.90000
4320	-6092.80700	-5981.34200	-5832.72300	-5748.63600	-5637.17100	-5490.50700	-5377.08700
	23.86733	40.01080	64.99800	81.10800	107.99640	143.84760	170.73600
MIN. OSD VOLUME (m^3)							107.99640

FOR DA ONLY

SURVEY INFORMATION
SURVEYED BY
CONSULTING SURVEYORS
DENNY LINKER & CO.
DATUM: A.H.D.

REVISION	AMENDMENT	DRAWN	DESIGNED	DATE	REVISION	AMENDMENT	DRAWN	DESIGNED	DATE
02	ISSUED FOR DA	JK	LV	16.07.2020					
01	PRELIMINARY ISSUE	KR	LV	05.12.2019					

Client
FRENCHMANS LODGE PROPERTIES PTY LTD

Architect
BOFFA ROBERTSON GROUP

This drawing and design remains the property of Henry & Hymas and may not be copied in whole or in part without the prior written approval of Henry & Hymas.

Level 5,
79 Victoria Avenue
Chatswood NSW 2067

Telephone
+61 2 9417 8400
Facsimile
+61 2 9417 8337
Email
email@hhconsult.com.au
Web
www.henryandhymas.com.au

henry&hymas

Project
SUMMIT CARE
11-19 FRENCHMANS ROAD, RANDWICK NSW

Title
OSD VOLUME CALCULATION AND NOTES

Drawn	Designed	Date
K.Rom	L.Villa	SEP 2019
Checked	Approved	Scale @A1
T.Rozehnal	A.Francis	NTS

Drawing number: 19826_DA_C211
Revision: 02

PIT VOLUME CALCULATED FOR THE CATCHMENT OF THE BASEMENT RAMP WITH 554m²

NOTE:
1. PIT FOOTINGS AND WALLS REFER STRUCTURAL ENGINEER FOR DETAILS.
2. ALL THE AG LINES BEHIND THE BASEMENT WALLS TO BE CONNECTED TO PUMP OUT PIT.

INSTALL PACKAGED PUMP STATION GRUNDFOS UNILIFT AP35B OR EQUIVALENT WITH 1200x1200 GALVANISED ACCESS/OVERFLOW GRATE DUAL SUBMERSIBLE FREE STANDING PUMPS. PUMP DUTY 10L/s AT 10m HEAD COMPLETE WITH FLOAT SWITCHES CONTROL PANEL AND WARNING LIGHT.

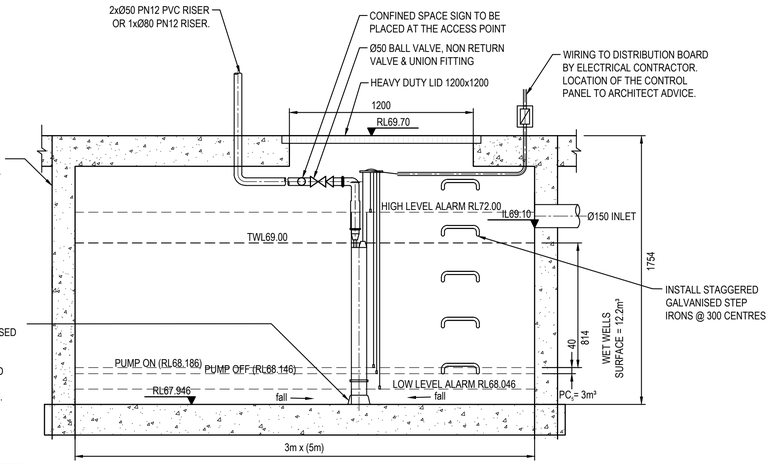

PUMP OUT PIT IN ACCORDANCE WITH COUNCIL'S DEVELOPMENT ENGINEERING STANDARDS AND AS3500.3

DOUBLE PUMP OUT STORMWATER PIT

SCALE: 1:20

BASEMENT PUMP OUT CALUCLATIONS

PUMP WET WELL DESIGN IN ACCORDANCE WITH RANDWICK CITY COUNCIL PRIVATE STORMWATER CODE SECTION 3.3: "THE PUMP WET WELL SHALL BE SIZED FOR THE 1 IN 100 YEAR, 2 HOUR STORM ASSUMING BOTH PUMPS ARE NOT WORKING".

EXPOSED AREA: 140m²

100 ARI		VOLUME (m^3)	PUMPOUT VOLUME (m^3)	PIT VOLUME REQUIRED (m^3)
TIME (min)	INTENSITY (mm/hr)			
5	271	2.53	0.3	2.23
10	214	3.99	0.6	3.39
15	180	5.04	0.9	4.14
20	165	6.16	1.2	4.96
25	150	7.00	1.5	5.50
30	138	7.73	1.8	5.93
45	110	9.24	2.7	6.54
60	96	10.75	3.6	7.15
90	75	12.6	5.4	7.20
120	62.3	13.96	7.2	6.76
180	47.3	15.89	10.8	5.09
			TOTAL VOLUME REQ (m^3)	13.96
			VOL PUMPED IN 30 min (m^3)	1.80
			WET WELL STORAGE (m^3)	12.20

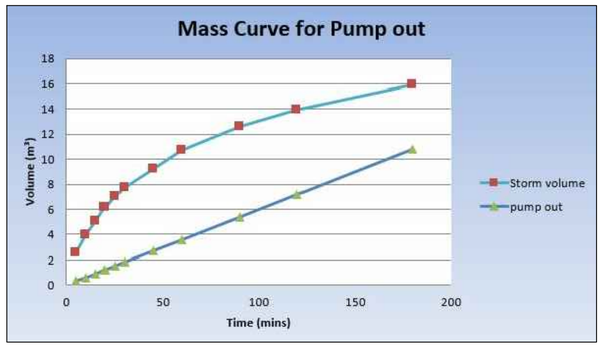

0 400 800 1200 1600 2000mm
400 200
SCALE 1:20

FOR DA ONLY

SURVEY INFORMATION
SURVEYED BY CONSULTING SURVEYORS DENNY LINKER & CO.
DATUM: A.H.D.

REVISION	AMENDMENT	DRAWN	DESIGNED	DATE	REVISION	AMENDMENT	DRAWN	DESIGNED	DATE
02	ISSUED FOR DA	JK	LV	16.07.2020					
01	PRELIMINARY ISSUE	KR	LV	05.12.2019					

Client
FRENCHMANS LODGE PROPERTIES PTY LTD

Architect
BOFFA ROBERTSON GROUP

This drawing and design remains the property of Henry & Hymas and may not be copied in whole or in part without the prior written approval of Henry & Hymas.

Level 5,
79 Victoria Avenue
Chatswood NSW 2067
Telephone +61 2 9417 8400
Facsimile +61 2 9417 8337
Email email@hhconsult.com.au
Web www.henryandhymas.com.au
henry&hymas

Project
SUMMIT CARE
11-19 FRENCHMANS ROAD, RANDWICK NSW

Title
PUMP OUT SECTION & DETAILS

Drawn	Designed	Date
K.Rom	L.Villa	SEP 2019
Checked	Approved	Scale @A1
T.Rozehnal	A.Francis	AS NOTED

Drawing number: 19826_DA_C220
Revision: 02

TOTAL CATCHMENT AREA: 2709.7m²

LANDSCAPE	AREA: 326.2m² (12.0%)
HARDSTAND	AREA: 797.9m² (29.5%)
ROOF DRAINAGE	AREA: 1585.6m² (58.5%)

PRE-DEVELOPMENT CATHCMENT PLAN

SCALE 1:200

0 4 8 12 16 20m
4 3 2 1
SCALE 1:200

FOR DA ONLY

SURVEY INFORMATION
SURVEYED BY
CONSULTING SURVEYORS
DENNY LINKER & CO.
DATUM: A.H.D.

REVISION	AMENDMENT	DRAWN	DESIGNED	DATE
02	ISSUED FOR DA	JK	LV	16.07.2020
01	PRELIMINARY ISSUE	KR	LV	05.12.2019

Client
BESOL PTY LTD
Architect
BOFFA ROBERTSON GROUP

This drawing and design remains the property of Henry & Hymas and may not be copied in whole or in part without the prior written approval of Henry & Hymas.

Level 5,
79 Victoria Avenue
Chatswood NSW 2067
Telephone +61 2 9417 8400
Facsimile +61 2 9417 8337
Email email@hhconsult.com.au
Web www.henryandhymas.com.au
henry&hymas

Project
SUMMIT CARE
11-19 FRENCHMANS ROAD, RANDWICK NSW

Title
PRE-DEVELOPMENT CATCHMENT PLAN

Drawn	Designed	Date
K.Rom	L.Villa	SEP 2019
Checked	Approved	Scale @A1
T.Rozehnal	A.Francis	1:200

Drawing number: 19826_DA_C250
Revision: 02

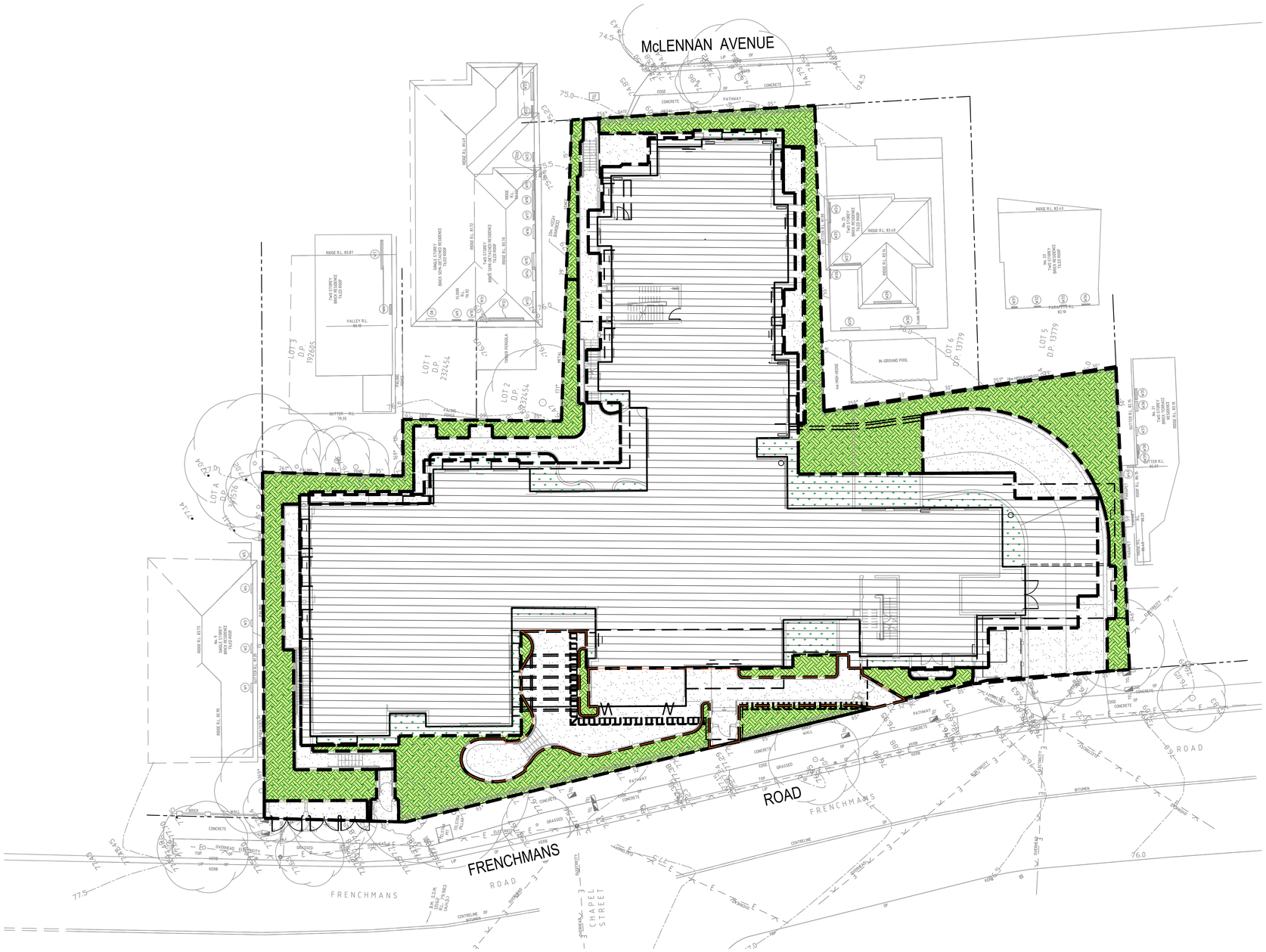

TOTAL CATCHMENT AREA: 2709.7m²

LANDSCAPE
AREA: 518.7m² (19%)

HARDSTAND & ROOF
AREA: 520m² (19%)

ROOF DRAINAGE
AREA: 1671m² (62%)

POST-DEVELOPMENT CATHCMENT PLAN

SCALE 1:200

0 4 8 12 16 20m
4 3 2 1
SCALE 1:200

FOR DA ONLY

SURVEY INFORMATION
SURVEYED BY
CONSULTING SURVEYORS
DENNY LINKER & CO.
DATUM: A.H.D.

REVISION	AMENDMENT	DRAWN	DESIGNED	DATE
03	ISSUED FOR DA	JK	LV	28.08.2020
02	ISSUED FOR DA	JK	LV	16.07.2020
01	PRELIMINARY ISSUE	KR	LV	05.12.2019

Client
FRENCHMANS LODGE PROPERTIES PTY LTD

Architect
BOFFA ROBERTSON GROUP

This drawing and design remains the property of Henry & Hymas and may not be copied in whole or in part without the prior written approval of Henry & Hymas.

Level 5,
79 Victoria Avenue
Chatswood NSW 2067

Telephone
+61 2 9417 8400
Facsimile
+61 2 9417 8337
Email
email@hhconsult.com.au
Web
www.henryandhymas.com.au

henry&hymas

Project
SUMMIT CARE
11-19 FRENCHMANS ROAD, RANDWICK NSW

Title
POST-DEVELOPMENT CATCHMENT PLAN

Drawn	Designed	Date
K.Rom	L.Villa	SEP 2019
Checked	Approved	Scale @A1
T.Rozehnal	A.Francis	1:200

Drawing number: 19826_DA_C251
Revision: 03